BRUNNER FIREPLACES

Stil-Kamin 75/90
lifting doors

State: 04.12.2012

BRUNNER®

made in germany

Dimension sheet | **Stil-Kamin 75/90 lifting doors**

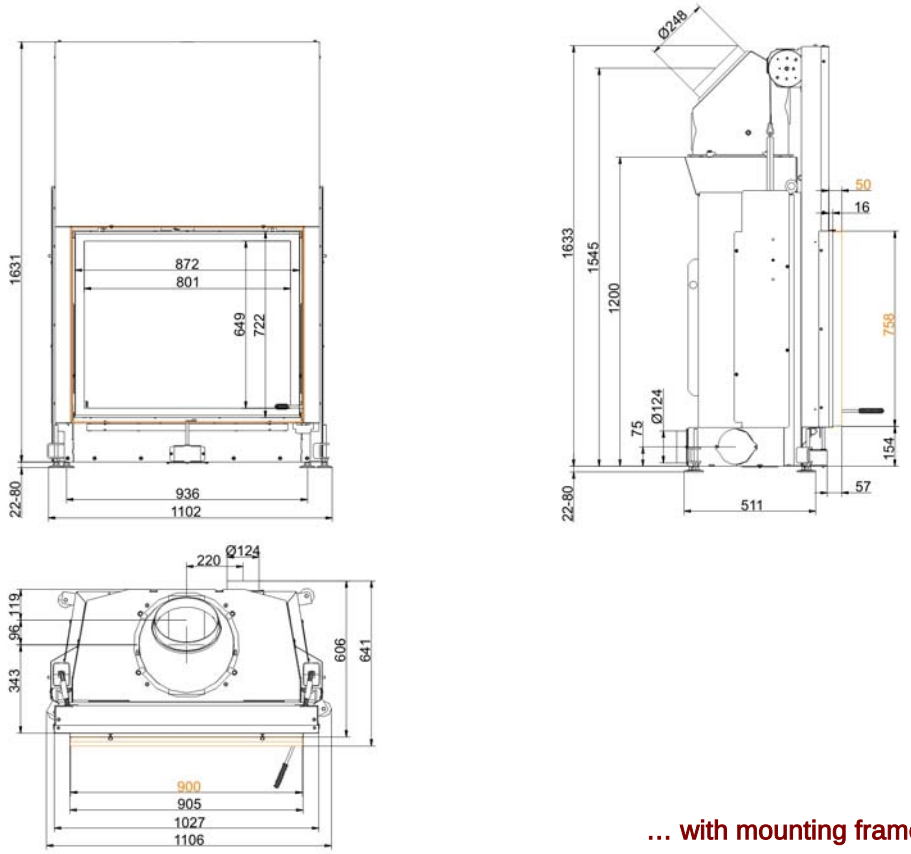

… with mounting frame 50 mm

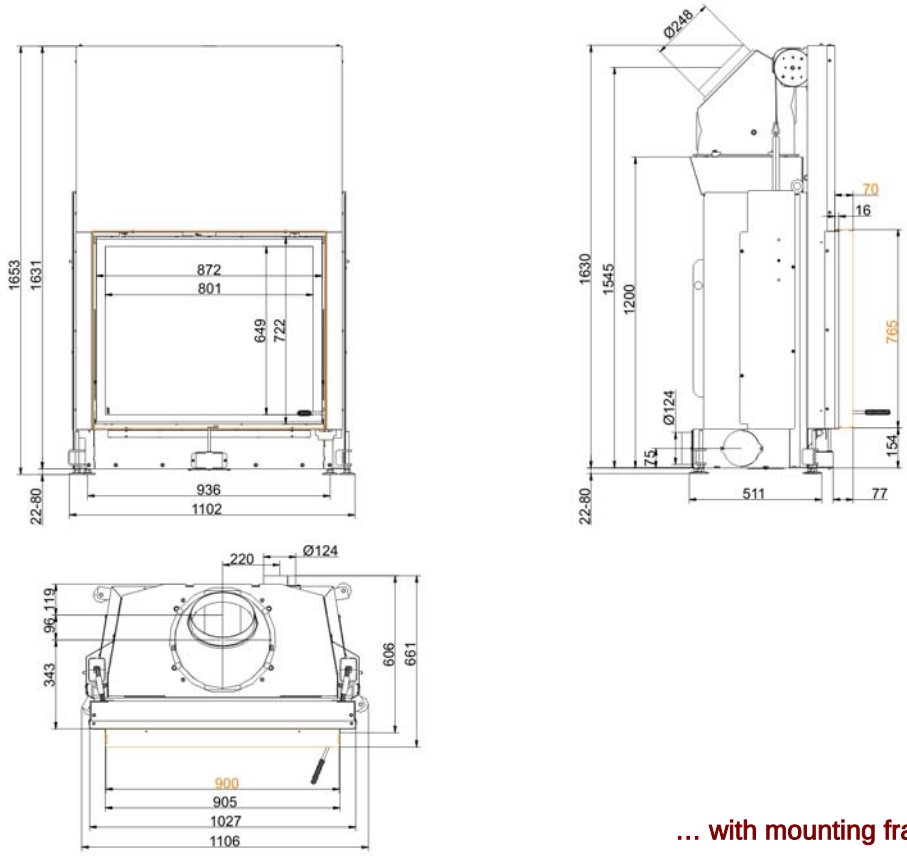

… with mounting frame 70 mm

We suggest for CAD planing Palette CAD. Permanent updated drawings: www.brunner.de
Frames / front versions are marked colored.

Dimension sheet | **Stil-Kamin 75/90 lifting doors**

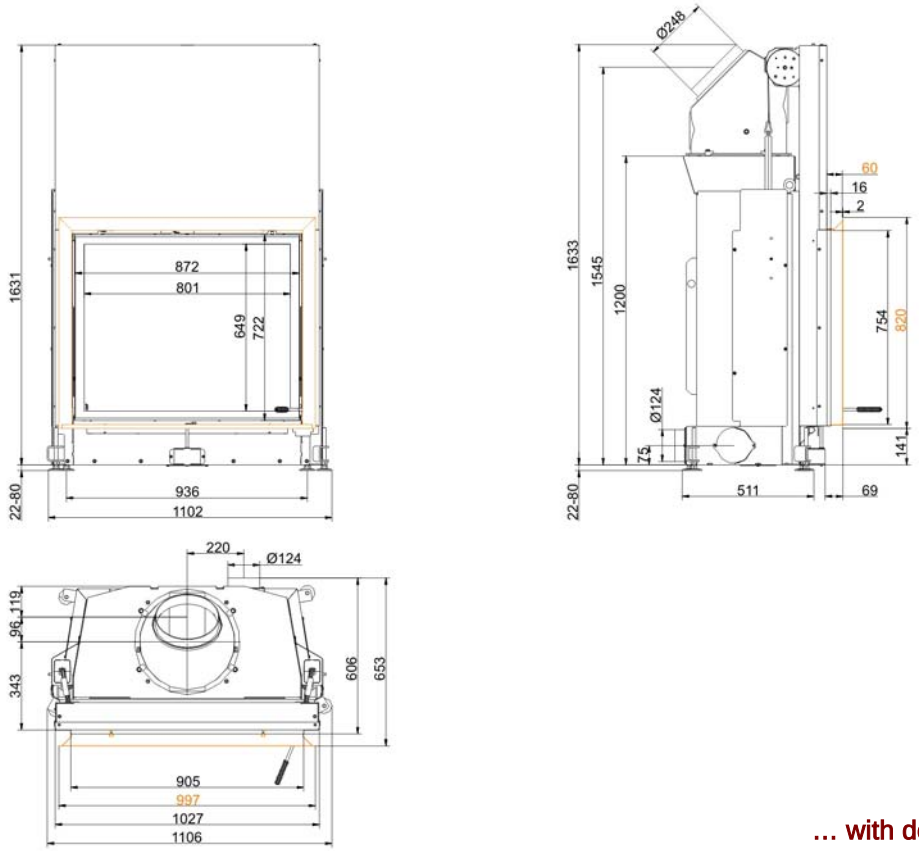

… with door frame

We suggest for CAD planing Palette CAD. Permanent updated drawings: www.brunner.de
Frames / front versions are marked colored.

Planning and installation

Stil-Kamin 75/90

Tested according to		EN 13229 W	EN 13229 W
Values measured at		nominal load	open door
Suitable for all construction types according to rules		OK	OK
Data for functional demonstration			
Rated heat power	kW	14	-
Firewood consumption	kg/h	4	4
Combustion performance	kW	16	13
Flue gas mass flow	g/s	12	85
Outlet temperature (before heating surface)	°C	340	-
Flue gas temperature after			
attached steel smoke hood	°C	233	125
1 x adjoining cast iron radiator (GNF10)	°C	140	-
7 x accumulation rings (MAS) 1)	°C	220	-
adjoining ceramic accumulator 2)	°C	-	-
ceramic modular accumulator (KMS system)	°C	-	-
water boiler	°C	-	-
Necessary supply pressure	Pa	12	8
Combustion air consumption	m³/h	42	220
Combustion air connection Ø	mm	125	-
Heat distribution			
Insert / heating surface	%	60 / -	- / -
Glass (single / double)	%	40 / -	- / -
Boiler	%	-	-
Cross-section of gratings for max. warm air power			
Supply air	cm²	1500	0
Warm air	cm²	1500	0
Minimal oven surface for closed construction type			
Surface giving off heat	m²	5,5	-
Space inside oven chamber			
Distance to oven chamber wall	cm	8	8
Distance to floor	cm	-	-
Heat insulation without / with 3) air gratings			
Wall	cm	18 / 14	18 / 14
Floor	cm	4 / 2	4 / 2
Ceiling	cm	22 / 16	22 / 16
Insulation of additional fire door DHT	cm	-	-
Brick lining of protected walls	cm	10	10
Weight			
Fireplace + burning chamber	kg	245 + 128	
meets requirement limit values for			
Germany / Austria / Switzerland / Norway		1.BImSchV (Stufe 2) / 15a BVG / LRV / NS 3059	

1) Throttle flap recommended
2) Approximate value, must be calculated eventually
3) Values with air gratings, stove casing is heat conducting

Ulrich Brunner GmbH
Zellhuber Ring 17 -18
D-84307 Eggenfelden
Phone: +49 / (0)87 21 / 7 71-0
Fax: +49 / (0)87 21 / 7 71-100
info@brunner.de | www.brunner.de

BRUNNER products are offered and sold only by qualified dealers and service centres.
Subject to technical and assortment changes. Errors excepted. (12/12)